Transient Control Level Test Generators

François Martzloff
General Electric Company
Schenectady NY

Reprinted from unclassified *General Electric TIS Report 77 CRD241*, November 1977

Significance

Part 5 – Monitoring Instruments, laboratory measurements, and test methods
This report describes in detail a surge generator producing a waveform mimicking a typical waveshape as observed during several years of recording transients in residential circuits; the source impedance is believed to be representative of real-world conditions.

This packaged design, suitable for bench-top use, was implemented and several units were built for GE Corporate R&D, GE operating departments, and the Underwriters Laboratories where it was initially used in conjunction with UL standards concerned with GFCI misoperation. It should be noted that at that time, the perceived threat for GFCIs was the low energy-delivery capability of oscillatory transients and no commercial units were yet available. This test waveform was adopted, under the designation of 100 kHz Ring Wave, in IEEE Std 587™-1980 (which later became IEEE Std C62.41™-1980 and its latest version IEEE Std C62.41.1™-2002).

GENERAL ELECTRIC

General Electric Company
Corporate Research and Development
Schenectady, New York

TECHNICAL INFORMATION SERIES

AUTHOR	SUBJECT	NO. 77CRD241
Martzloff, FD	impulse generator for TCL testing	DATE November 1977
TITLE		GE CLASS 1
Transient Control Level Test Generators		NO. PAGES 9
ORIGINATING COMPONENT Electronic Power Conditioning and Control Laboratory		CORPORATE RESEARCH AND DEVELOPMENT SCHENECTADY, N.Y.

SUMMARY

The successful operation of consumer electronic devices requires that these devices survive in a hostile environment, sometimes not recognized, where overvoltages on a 120 V supply can exceed 5 kV in extreme cases, and frequently 1200 V in many locations. Therefore, a method of demonstrating withstand capability has to be developed along acceptable standards, or at least guidelines.

As an example of the need for such a circuit, the Underwriters' Laboratories require a trip-free withstand of 3 kV, and a failure-free withstand of 6 kV for the recently introduced Ground Fault Circuit Interrupters.

A test circuit which produces an impulse voltage superimposed on the 120 V supply has been described. The circuit approximates a typical waveshape as observed during several years of recording transients in residential circuits; the source impedance is believed to be representative of real-world conditions.

In other reports the concept of Transient Control Levels (TCL) is proposed to users and manufacturers of equipment. It is hoped that the impulse generator circuits described in this report will be a useful tool in implementing the concept so that it will gain general acceptance.

KEY WORDS

transients, spikes, surges, withstand, standard, coordination overvoltage tests, design tests, Transient Control Levels (TCL)

INFORMATION PREPARED FOR _____

_____

Additional Hard Copies Available From — Corporate Research & Development Distribution, P.O. Box 43 Bldg. 5, Schenectady, N.Y., 12301

Microfiche Copies Available From — Technical Information Exchange, P.O. Box 43 Bldg. 5, Schenectady, N.Y., 12301

RD-54 (10/70)

TRANSIENT CONTROL LEVEL TEST GENERATORS

F. D. Martzloff

INTRODUCTION

The successful operation of consumer electronic devices requires that these devices survive in a hostile environment, sometimes not recognized, where overvoltages on a 120 V supply can exceed 5 kV in extreme cases, and frequently 1200 V in many locations.[1] Therefore, a method of demonstrating withstand capability has to be developed along acceptable standards, or at least guidelines.

As an example of the need for such a circuit, the Underwriters' Laboratories require a trip-free withstand of 3 kV, and a failure-free withstand of 6 kV for the recently introduced Ground Fault Circuit Interrupters.[2]

A test circuit which produces an impulse voltage superimposed on the 120 V supply has been described (Ref. 3). This circuit approximates a typical waveshape as observed during several years of recording transients in residential circuits.[1] The source impedance is believed to be representative[4] of real-world conditions.

In other reports[5, 6] the concept of Transient Control Levels (TCL) is proposed to users and manufacturers of equipment. It is hoped that the impulse generator circuits described in this report will be a useful tool in implementing the concept so that it will gain general acceptance.

TEST WAVESHAPE

The test waveshape proposed in Refs. 5 and 6 under the name of "Transient Control Level" has been selected as most representative of conditions encountered during actual measurements. It contains a fast rise that can stress inductive components, a slower oscillating tail which can be integrated by those circuits containing a rectifier circuit. However, it does not have the large energy contained in a 40 or 50 μs to half-value tail suggested by others, which appears excessive and would unduly stress energy-absorbing components in the test piece.

As discussed in the TCL paper, there is no way to select a waveshape that will represent all possible conditions. Rather, the approach is to agree on a standard waveshape anchored in reality and, by experience, to correlate the fact that devices which can pass the TCL waveshape have successful field performance. To represent conditions realistically, the proposed test waveshape had a 0.5 μs rise time, a period of 10 μs during later oscillations, and a decrement of 60% between successive peaks. Further, the effective source impedance is set at 50 Ω, as determined by a 50% decrease from open-circuit voltage to a 50 Ω resistive load condition.

After this waveshape had been established, discussions within the IEEE and IEC community on the desirable value of source impedance led to the proposal of a parallel combination of 50 Ω and 50 μH as a representative source impedance. The initial generator circuit was then modified to provide this new source impedance, and the results were compared to the initial circuit[3] performance. This report describes in some detail the principle, design, and results of the two circuits. The generator presented here, while not offering the ruggedness or convenience of commercial products,[7] can be assembled by a reasonably competent technician and used in a laboratory environment by qualified individuals.

PRINCIPLE

Energy is stored in a capacitor and discharged into an isolated 120 V supply by means of a simple electromechanical relay. The rate of rise of the voltage is produced by a first resonating L-C circuit, which is damped sufficiently to let a second resonating circuit control the decay and subsequent oscillations of the voltage, according to the proposed standard waveshape. The 120 V upstream supply is protected against overvoltages by a large capacitor connected across the secondary of the isolating transformer.

The use of a low-voltage (120 V rating) relay as the high-voltage switch might seem surprising. However, this is a very effective and low-cost approach, as long as it is recognized that conventional clearances and withstand voltages are obviously not observed in this circuit. However, in the case of breakdown, the worst that can happen is a premature exposure of the test piece to the spike that would normally be manually triggered by the "fire" button. Compared to other approaches, using a high-voltage switch or a stepup transformer,[3] this approach using a relay makes the circuit inexpensive and easily assembled.

The complete circuit is contained in a metal cabinet, requiring only a 120 V, 60 Hz supply (Fig. 1). This cabinet includes the necessary DC supply for charging the capacitor, an isolating transformer for providing the 120 V supply to the test piece, and the closing relay and its control circuit.

BASIC IMPULSE GENERATOR CIRCUIT

The schematic of the basic impulse in its first form is shown in Fig. 2. The variable voltage obtained from the autotransformer T3 is applied to the primary of the stepup transformer T2 (a 15 kV neon tube supply transformer). The secondary of T2 is connected in a full-wave, center-tapped rectifier configuration. The storage capacitor C1 is charged through the resistor R3, until the relay CR-1 will discharge it into the 120 V test circuit, supplied by

Manuscript received October 18, 1977.

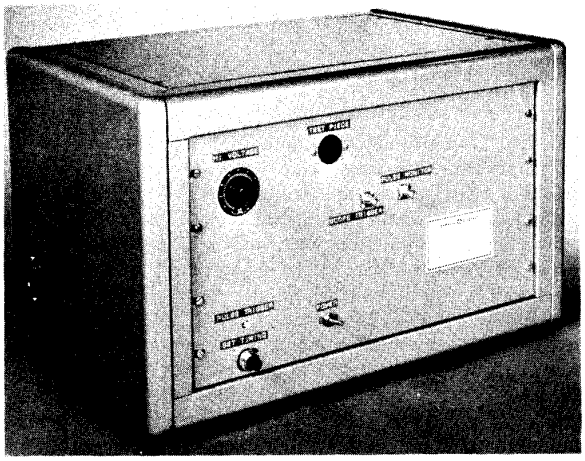

Fig. 1 Transient control level test generator.

by the isolating transformer T1. The relay control circuit is described in detail in the next section.

The rise time of the wave is controlled by the series resonance of L1 with C1-C2 in series, with a surge impedance of approximately 50 Ω, damping being provided by the resistance R1. Following this rise, the two capacitors, C1 and C2, now tied together by the closed contact and the low-inductance L1, resonate with the inductance L2, as C3 offers a low impedance to the surge, at the same time protecting the upstream power supply from the surge. L2 then holds off the surge voltage while carrying the full-load 60 Hz current (and is designed accordingly). The resistance R2 is selected to provide the damping of the tail oscillation, which has been set at a decay of 60% between successive peaks in the proposed "standard" TCL waveshape.

The output voltage, brought out to terminals of the front panel, can be monitored through the approximate divider R5/(R4 + R5). Alternately, the open-circuit voltage produced by the generator can be preset by calibrating the autotransformer T3. However, neither method can be sufficiently accurate for precise determination of the spike voltage; final determination should be made by direct measurement at the output terminals, using a suitable probe and oscilloscope.

A second circuit approach, suggested by Crouch and Fisher[8] is shown in Fig. 3. In this circuit, the basic oscillation is produced by the C1-L1 circuit when the CR-1 switch is closed, and applied to the test piece through the 50 μH/50 Ω network. The rise time is controlled by the R1-C2 time constant. This second circuit has an impedance which is closer to the theoretical 50 μH/50 Ω source impedance than the first. However, the actual difference in the performance, as well as the measured impedance, is small, as

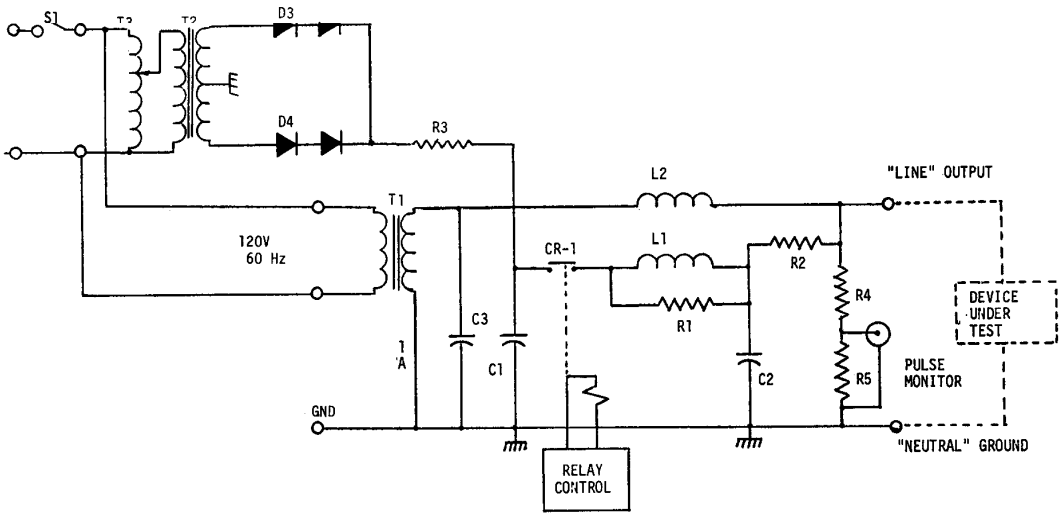

R1 - 22Ω, 1W, Comp.

R2 - 12Ω, 1W, Comp.

R3 - 1.3MΩ (12 x 110kΩ, 1/2W)

R4 - 47kΩ (10 x 4.7kΩ, 1/2W)

R5 - 470Ω, 1/2W

CR-1 - Relay 2 N.O. poles in series GE CR2790E100 A2

T1 - 2 KVA 120-240/120-240 Volts

T2 - 90 VA 120/15000 Volts 60 MA (Neon Tube)

S1 - Line Switch

C1 - 0.025μF, 10kV (0.02 + 0.005) Plastic Film

C2 - 0.006μF, 7.5kV ceramic (Sprague)

C3 - 10μF, 330VAC Pyranol (GE)

L1 - 15μH, (35 turns, #23 wire 0.75" dia. Air Core)

L2 - 70μH, (44 turns, #14 wire 2.25" dia. Air Core)

D3,D4 - Diodes UDC 10

Fig. 2 Basic impulse generator circuit, first design.

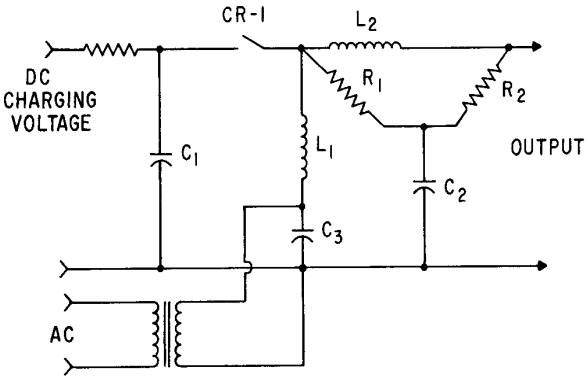

C1 = 0.25 μF R1 = 25 Ω L1 = 10 μH
C2 = 0.005 μF R2 = 25 Ω L2 = 50 μH
CR-1--Same as Fig. 2

Fig. 3 Output stage of the second circuit for TCL wave.

indicated by the oscillograms of Figs. 4 and 5 and the impedance plot of Fig. 6.

While the initially developed circuit used a gate output from an oscilloscope to produce a timed closing of the relay (with respect to the 60 Hz line voltage), the new implementation includes a timer circuit producing a single-shot pulse of current driving the relay coil at a preselected time of the supply sinusoid, so that the spike voltage can be applied at any desired instant of the 60 Hz wave, by setting a built-in control (Fig. 7).

A built-in time delay lockout in the trigger circuit has been provided to allow the capacitor driving the relay coil to reach a uniform voltage from one test to the next, in order to reduce variability in the closing time of the relay and thus to promote more consistent timing of the spike. If a repetition rate faster than the built-in 6-second interval were necessary, the time delay could be reduced, at the cost of less accurate timing of the spike.

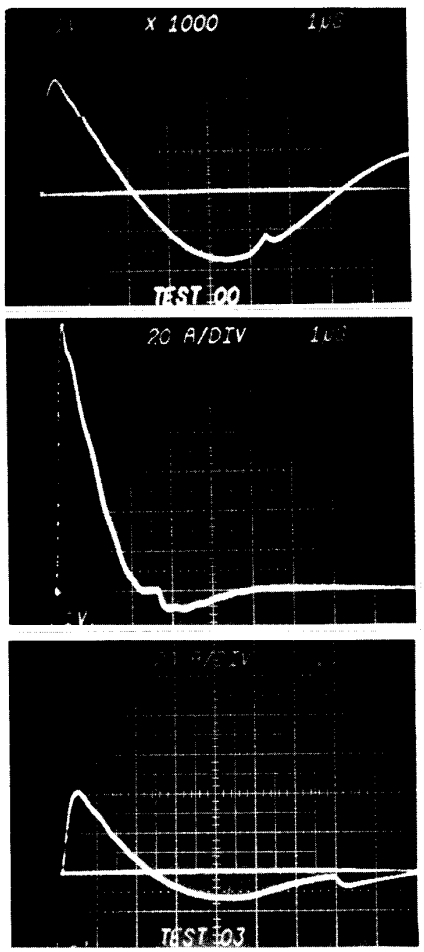

OPEN CIRCUIT VOLTAGE

SHORT CIRCUIT CURRENT

CURRENT INTO 50Ω LOAD

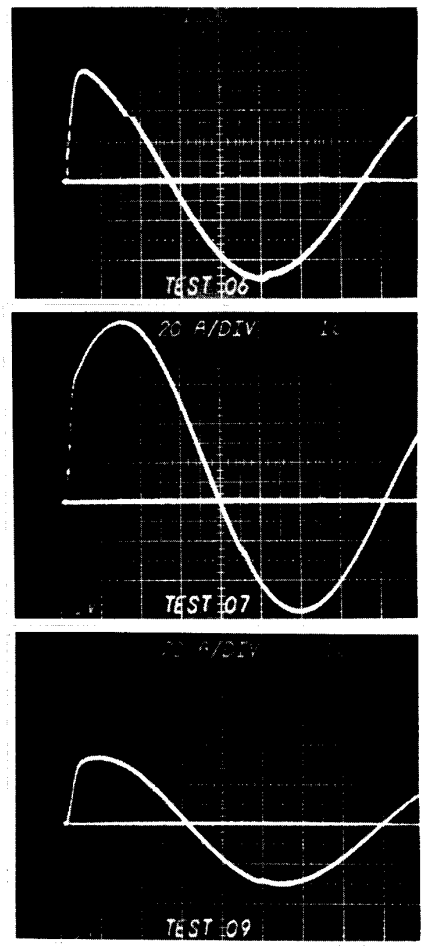

Fig. 4 Output of the first circuit.

Fig. 5 Output of the second circuit.

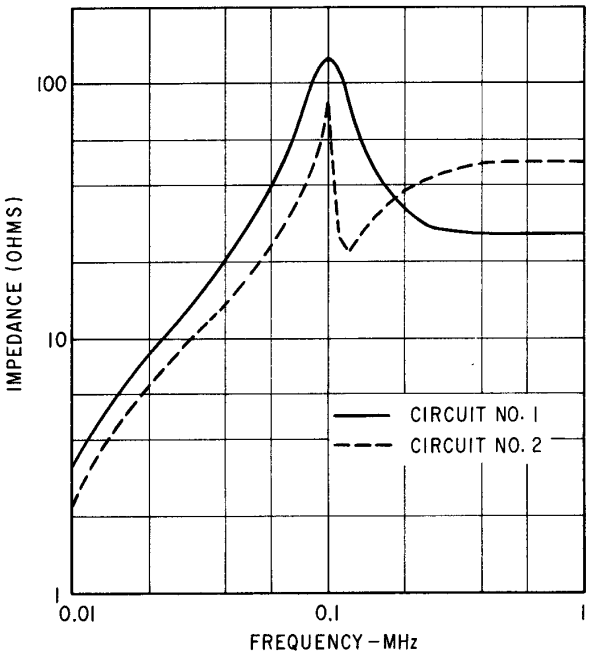

Fig. 6 Impedance of the two TCL circuits.

The amplitude of the pulse is adjusted simply by means of a control autotransformer in the primary of the high-voltage transformer, which can be precalibrated for open-circuit voltage setting.

The isolating transformer, a conventional general-purpose transformer with two sets of windings in the primary and secondary, can be connected for a 240 V output if required; as built, the transformer

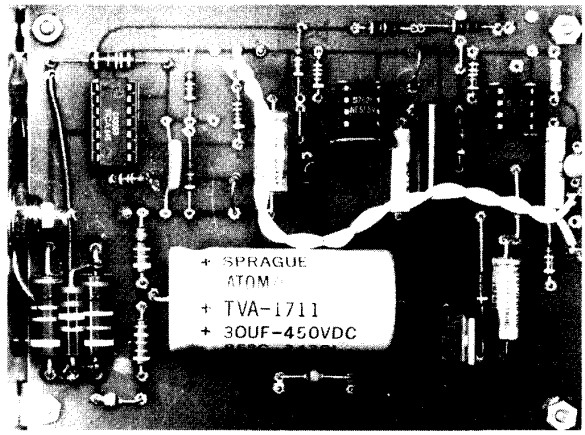

Fig. 7 Control circuit for synchronous trigger.

can deliver 2 kVA at 120 V into the test piece to be subjected to the spikes. Of course, the connection of a 2 kVA resistive load, on the 60 Hz/impulse output of the generator, will produce a large voltage drop in the pulse applied to the test piece. This voltage drop, caused by the regulation of the generator, must be recognized and addressed when specifying the test conditions.

The front panel controls (Fig. 8) are then limited to a voltage setting, a timing setting, and a fire button. The output is available on a standard three-prong outlet, with one side of the outlet grounded to the cabinet chassis. In turn, the cabinet chassis is connected to the ground wire of the power cord. Thus, the cabinet is normally grounded to the power supply ground. If a single point ground is required by the instrumenta-

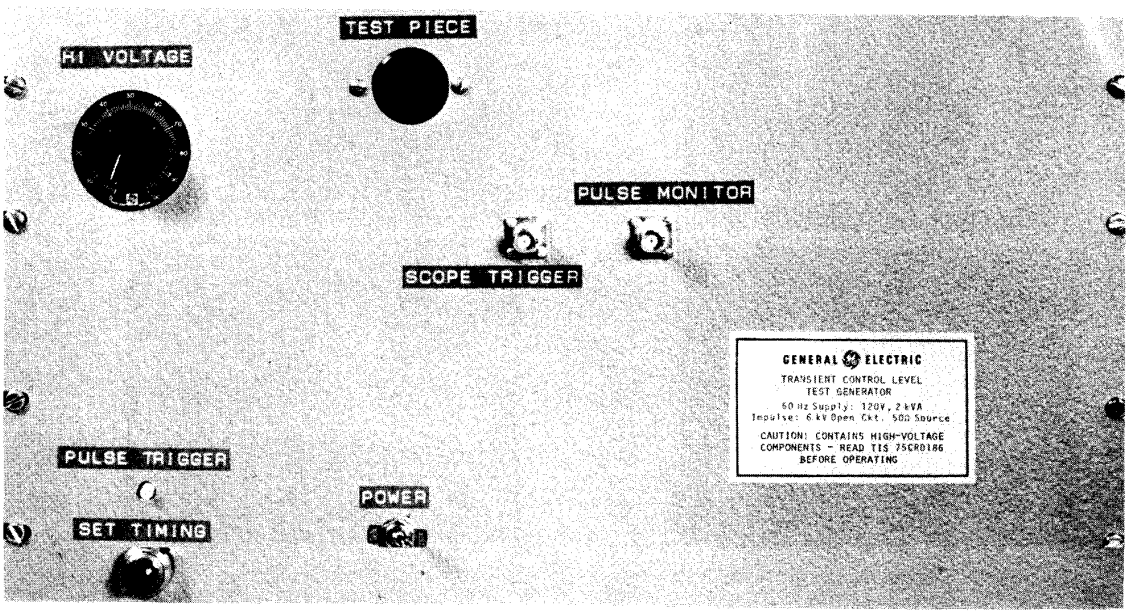

Fig. 8 Front panel controls.

tion system, resulting in the removal of the cabinet ground, adequate safety precautions must be taken. As an alternate panel connection, the 120 V terminals and the impulse terminals can be brought out on studs and connected externally to suit the needs of the test.

A connector on the front panel also brings out a signal for oscilloscope trigger, occurring at the time the relay coil is energized. This trigger signal is useful for displaying the full 60 Hz sinusoid with the superimposed spike. For resolution of the spike at faster sweep rates, this trigger signal would be premature; therefore, the oscilloscope should be set on internal trigger. Another connector on the front panel brings out a signal with an approximate voltage divider reading of 10 V per kilovolt of output voltage (within 10%). More accurate voltage readings require the use of a calibrated probe, such as Tektronix P6015, connected at the actual output terminals.

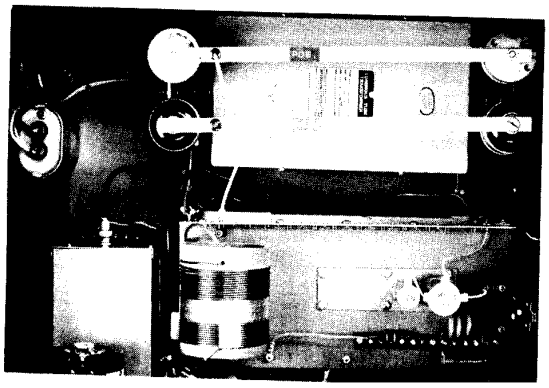

Fig. 9(a) Interior, top view.

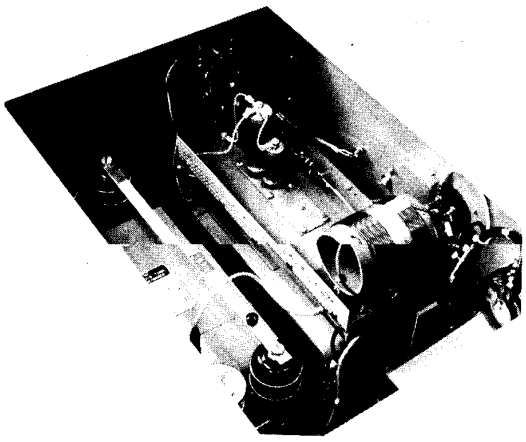

Fig. 9(b) Interior view, back of panel.

The original circuit specified for the waveshaping capacitor was a type that was found to have excessive (and inconsistent) internal inductance. This excess produced a very high frequency ring on the front of the wave, which in extreme cases could have an amplitude exceeding the crest of the desired wave. The problem was eliminated by substituting ceramic capacitors to the initial plastic-film design.

As a further refinement for laboratory use, the two basic impulse circuits were built as plug-in subcircuits so that they could be substituted for one another during the investigation of output waveshape and currents, as well as during later development of other circuitry. Figures 9, 10, and 11 show the plug-in arrangement of this circuitry.

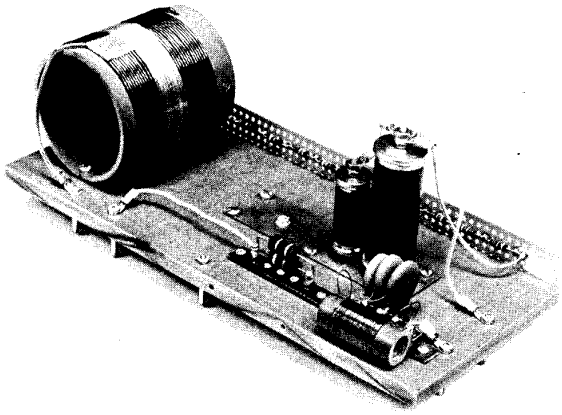

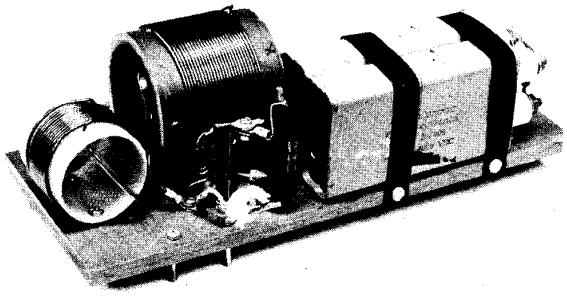

Fig. 11 Second circuit plug-in.

TRIGGER CIRCUIT

Figure 12 is a schematic of the timing circuit used to drive the relay at any time in the 60 Hz wave by a simple front panel setting.

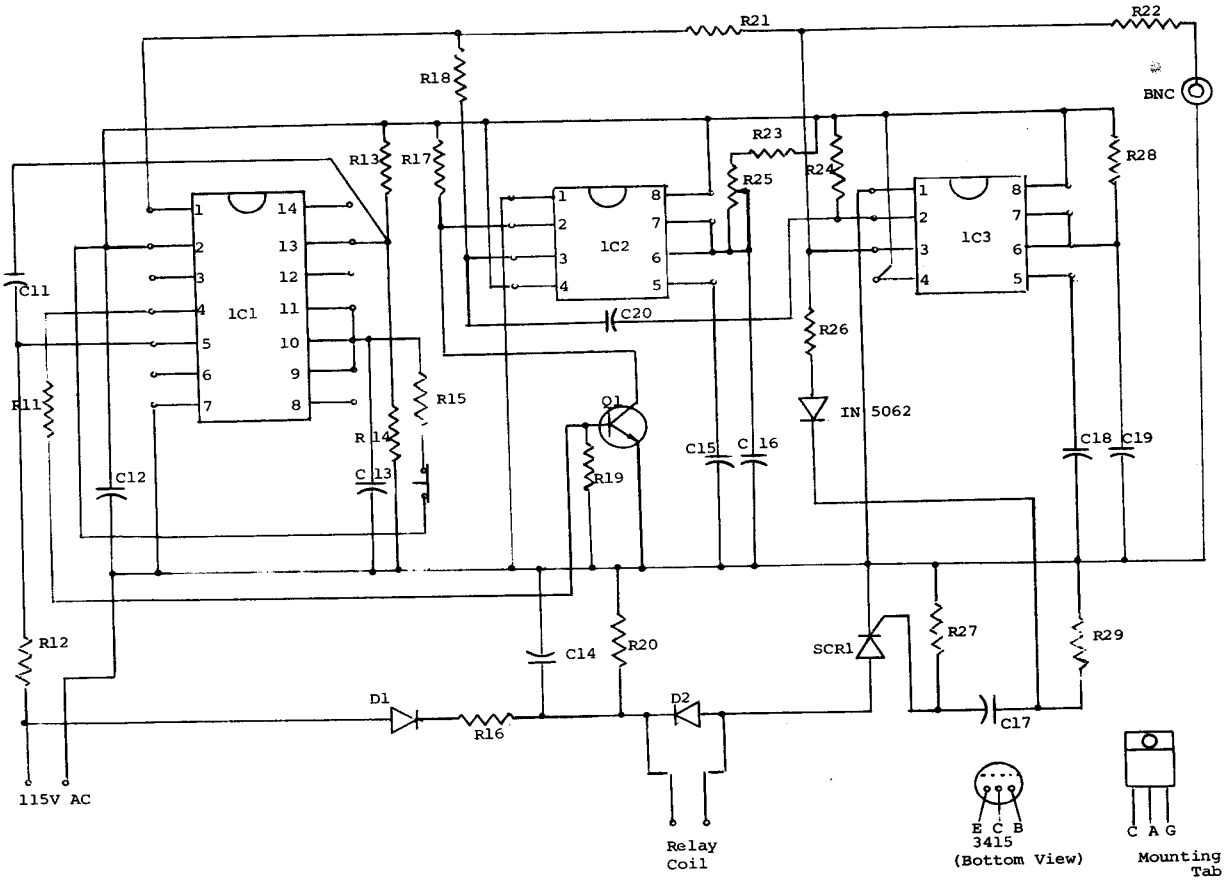

RESISTORS 1/4W 2%

R11	10kΩ	R21	10kΩ	D1,D2	IN5062	C17	10μF A 25VDC
R12	5kΩ (4W)	R22	1kΩ	SCR1	C-122B	C18	0.01μF M
R13	10kΩ	R23	5.6kΩ	C11	0.0047μF M	C19	4.7μF T
R14	10kΩ	R24	33kΩ	C12	2000μF E 15WDC	C20	1000pF M_A
R15	3.3kΩ	R25	10kΩ 10 Turn Pot	C13	10μF A 50 WDC	Q1	2N3415
R16	6.8kΩ	R26	68Ω	C14	30μF E 450 VDC	1C1	3059
R17	33kΩ	R27	100Ω	C15	0.01μF M	1C2-1C3	555
R18	10kΩ	R28	1MΩ	C16	0.22μF B		
R19	10kΩ	R29	10kΩ				
R20	100kΩ						

CAPACITORS

A Alumalytic
B Black Hawk
M Mylar
E Electrolytic
M_A Mica
T Tantalum

Fig. 12 Synchronous trigger circuit.

The circuit utilizes a zero crossing detector and a controlled time delay circuit. This arrangement permits zero time to be coincident with the 60 Hz wave as it crosses zero while going positive.

The circuit functions in the following manner. The 60 Hz AC from the secondary of T1 is applied to IC1 through R12. The circuit normally provides an output pulse every zero crossing of the 60 Hz wave. A resistive bridge network, consisting of R13, R14, and two resistors internal to IC1, is unbalanced by R15. In the unbalanced state the circuit is inhibited. Activation of the switch S1 causes the circuit to operate.

A pulse is fed internally to an AND gate which outputs only on positive-going zero crossings. The output of IC1 is applied to Q1, which inverts the pulse and applies it to IC2. IC2 is used as a time delay. The bias level of an internal comparator circuit is controlled by R25. Varying R25 changes the delay time and permits selection of the time of application of the pulse with respect to the 60 Hz wave. (Because delay time also includes the relay operation time, calibration must be made for each unit.) The output of IC2 is applied to IC3, which produces an output pulse. This pulse is applied to the gate of the thyristor SCR1 and to the scope trigger output. The thyristor SCR1 discharges C1 through the relay coil, thereby applying the high-voltage pulse to the line.

RELAY MODIFICATION

To maintain cost as low as possible, the CR1 relay is operated as a high-voltage switch. In the normal relay construction, the switch leads are attached to the case and connected by a braid to the contacts. The proximity of the braid connection to the relay coil on some relays may cause flashover to the coil at about 7 kV, applying undesirable pulses to the circuitry. To avoid this problem the relay was modified to bring the high voltage into the top contacts of the relay, and the braid connection to the terminals was removed. The two contacts on the armature bridge were then joined to obtain a series connection of the two contacts gaps, with input terminals at the stationary contacts. This configuration can withstand 14 kV between contacts and coil without breakdown.

The relay is further modified by removing the stationary contact of the normally closed pair and twisting the moving contact slightly to increase the contact gap, until only a barely perceptible wiping action occurs upon closing. This modification allows the two series-connected contacts to withstand 10 kV.

ISOLATING TRANSFORMER

T1 is a 120/240 V input, 120/240 V output transformer that may be used for 240 V AC output operation by changing the connection internally. The high-voltage circuit to the test device does not require change. The input to the timing circuit must be maintained at 120 V AC by using only one-half (X1-X2) of the T2 secondary when the two halves are connected in series to produce 240 V. This will maintain the timing characteristics relative to the zero crossing intact. Care must be taken to ensure that the ground connection (which is so marked) of the timing circuit remains connected to the grounded side of the T1 secondary.

SAFETY

The metallic enclosure of the cabinet provides a generally safe construction, consistent with typical laboratory-type equipment. Of course, the output outlet will supply 120 V to the test piece, with superimposed high-voltage spike. This will then require safety precautions consistent with general laboratory practices. As stated earlier, the cabinet is normally grounded to the power supply ground by means of the third wire of the three-wire line cord. There may be circumstances where a single-point ground, such as the chassis of the oscilloscope used for monitoring, may be required to minimize extraneous signals resulting from ground loops. In such cases, the line cord may be connected through a two-wire adapter, but suitable precautions must be taken to maintain the single-point ground connected at all times.

A warning sign cautions against opening the cabinet by uninformed personnel; high-voltage components, including capacitors that can retain a charge even after disconnecting the power cord, are not protected after the opening of any of the cabinet panels. Because no interlock is provided, the user must be thoroughly familiar with the design of this unit before attempting to open the cabinet, and must exercise all appropriate caution in servicing the circuit.

PERFORMANCE

The oscillograms of Figs. 13 through 17 (recorded with a Tektronix 7623A storage oscilloscope and a Tektronix P6015 1000:1 probe) illustrate the performance of the test generator. Figures 13 through 15 show the output voltage at different sweep speeds, in the open-circuit condition. The 100 kHz oscillation, or 10 μs period in the tail, can be seen in Fig. 13, as well as the 60% decrement factor between successive peaks. Figures 14 and 15 show the front of the wave, including some fine detail of the residual oscillations in the front, which are due to stray capacitance in the inductors and inductance in the capacitors. The frequencies are high, but the amplitudes, compared to the crest voltage, are small. A rise time of about 250 ns can be observed on Fig. 15.

Figure 16 shows the output of the generator when feeding a 50 Ω resistive load, at the same voltage setting as the open-circuit condition of Fig. 13. The approximate 50% reduction in output voltage indicates an internal impedance slightly below 50 Ω, providing a conservative margin over the design objective of a 50 Ω

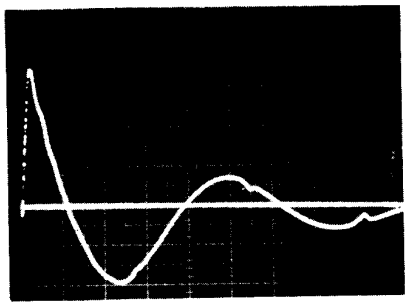

Fig. 13 Open-circuit voltage at maximum setting: 2 kV/div, 2 μs/div.

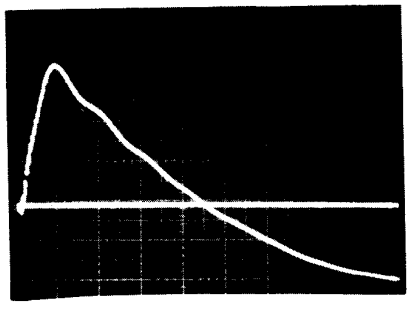

Fig. 14 Open-circuit voltage at maximum setting: 2 kV/div, 0.5 μs/div.

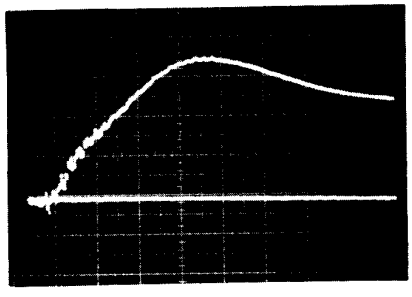

Fig. 15 Open-circuit voltage at maximum setting: 2 kV/div, 0.1 μs/div.

source impedance. This has not been raised to 50 Ω: first, in order to provide some margin and, second, in anticipation of the possible acceptance of J. H. Bull's (Ref. 4) value of 50 Ω, paralleled by 50 μH for a representative value of the impedance of the power system, which has an "effective impedance" of 30 Ω for the open-circuit voltage waveshape of interest.

Figure 17 shows the voltage appearing across the capacitor C3 at full output (6.8 kV) setting of the pulse. The very moderate disturbance in the 120 V power supply indicates the adequacy of the filtering scheme used in this circuit in isolating the test piece supply from the bench supply.

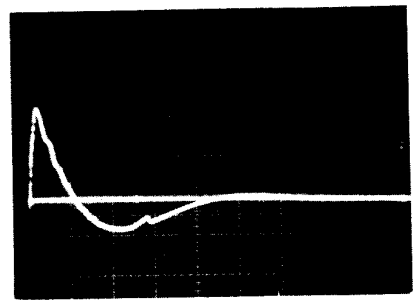

Fig. 16 Output voltage with 50-ohm load at maximum setting: 2 kV/div, 2 μs/div.

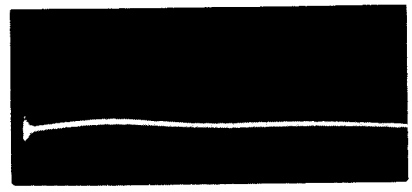

Fig. 17 Voltage across capacitor C3 at maximum output: 200 V/div, 2 μs/div.

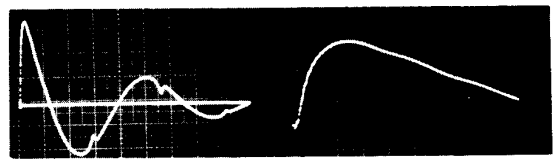

25% 0.5 kV/div

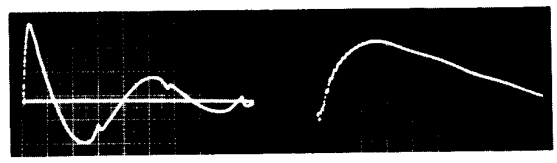

50% 1 kV/div

100% 2 kV/div

2 μs/div 0.2 μs/div

Fig. 18 Peak voltage and rise time.

The ceramic capacitors used for the output waveshaping have a small capacitance/voltage coefficient, as do most ceramic capacitors. With a variable voltage, the resulting capacitance change could affect the waveshape.

Admittedly, a search could be made for a capacitor with more constant dielectric. However, for the purpose of the test waveshape, the results obtained with the ceramic capacitors are satisfactory.

Figure 18 shows how a voltage change from 25% to 100% produces a slight change in the front of the wave, but very little change in the subsequent oscillation.

The most noticeable effect is the notch in the wave for lower voltages, resulting from the characteristics of the arc at the relay contacts. This small anomaly in the waveshape can be ignored because the real significance of the waveshape is the front of the wave and the total volt-seconds in the tail.

ACKNOWLEDGMENTS

The first basic impulse generator circuit approach derived from the work of E. K. Howell of the General Electric Circuit Protective Devices Products Department. The second circuit was developed by K. E. Crouch and F. A. Fisher of Corporate Research and Development (CRD). The synchronous trigger circuit was developed by M. D. Bloomer of CRD. Packaging of the circuit was accomplished by P. M. Szczesny of CRD. The improvements incorporated in this circuit were motivated by helpful discussions with A. W. Smoot and P. Richman, which are gratefully acknowledged.

REFERENCES

1. J. G. Hahn and F. D. Martzloff, "Surge Voltages in Residential Power Circuits," IEEE Trans. PAS-89, No. 6, 1049-1056 (July-Aug. 1970).

2. "Standard for Ground-Fault Circuit Interrupter," UL-943, Underwriters' Laboratories, Melville, N. Y.

3. E. K. Howell and F. D. Martzloff, "High-Voltage Impulse Testers," General Electric TIS Report 75CRD039.

4. J. H. Bull, "Impedance of the Supply Mains at Radio Frequencies," Proc. of 1st Intern. Symp. on EMC, Montreux (May 1975).

5. F. A. Fisher and F. D. Martzloff, "Transient Control Levels -- A Proposal for Insulation Coordination in Low-Voltage Systems," Trans. Power Applications and Systems, PAS-95 No. 1 (Jan-Feb 1976), pp. 120-129.

6. F. D. Martzloff and F. A. Fisher, "Transient Control Level Philosophy and Implementation," 77CH1224-5 EMC, Proc. of the 2nd Symposium on EMC, Montreux (June 1977).

7. Bulletins 424 and 281/261: "Model 424 Surge Generator/Monitor," Keytek Instrument Corp., Waltham, Mass. (1976).

8. K. E. Crouch, F. A. Fisher, and F. D. Martzloff, "Transient Control Levels -- A Better Way to Voltage Ratings in Power Converter Applications," 76CH1122-1-IA, IEEE-IAS 1976 Conferences Record, pp. 540-544.