Polystyrene Box Uniform Light Sources

— a continuation of the story of —

Rustic Metrology

CORM'99

Edward F. Kelley
NIST (Bldg 225, Rm B123)
100 Bureau Dr. (Stop 8114)
Gaithersburg, MD 20899

Phone: 301-975-3842, Fax: 301-926-3534
kelley@eeel.nist.gov

RUSTIC METROLOGY

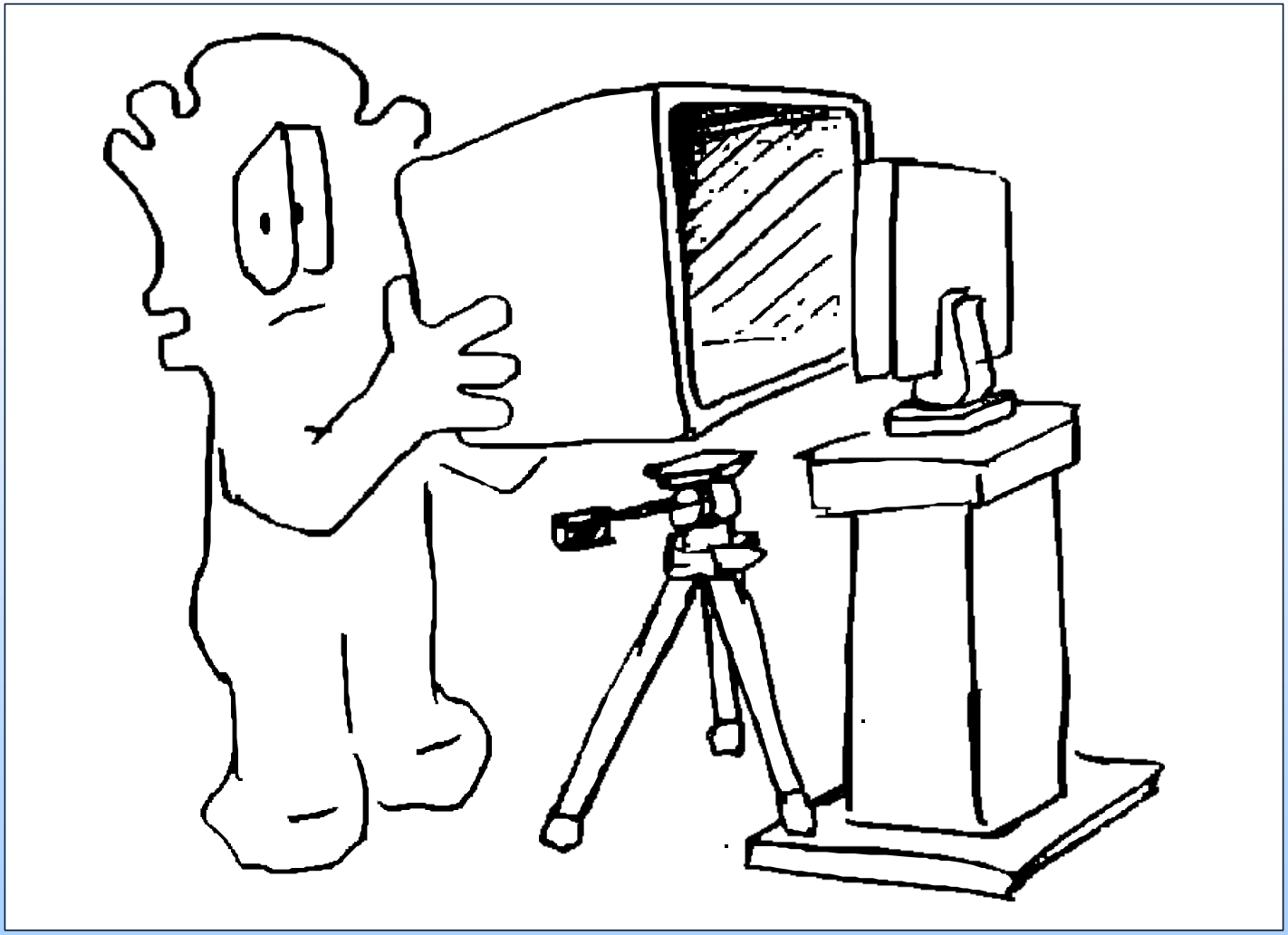

You might be a rustic if you use a beer cooler as an integrating sphere (or light source).

ISO 9241-7 Reflection Measurement

150 mm Exit Port, ≤ 1% Nonuniformity

"Diffuse" Measurement

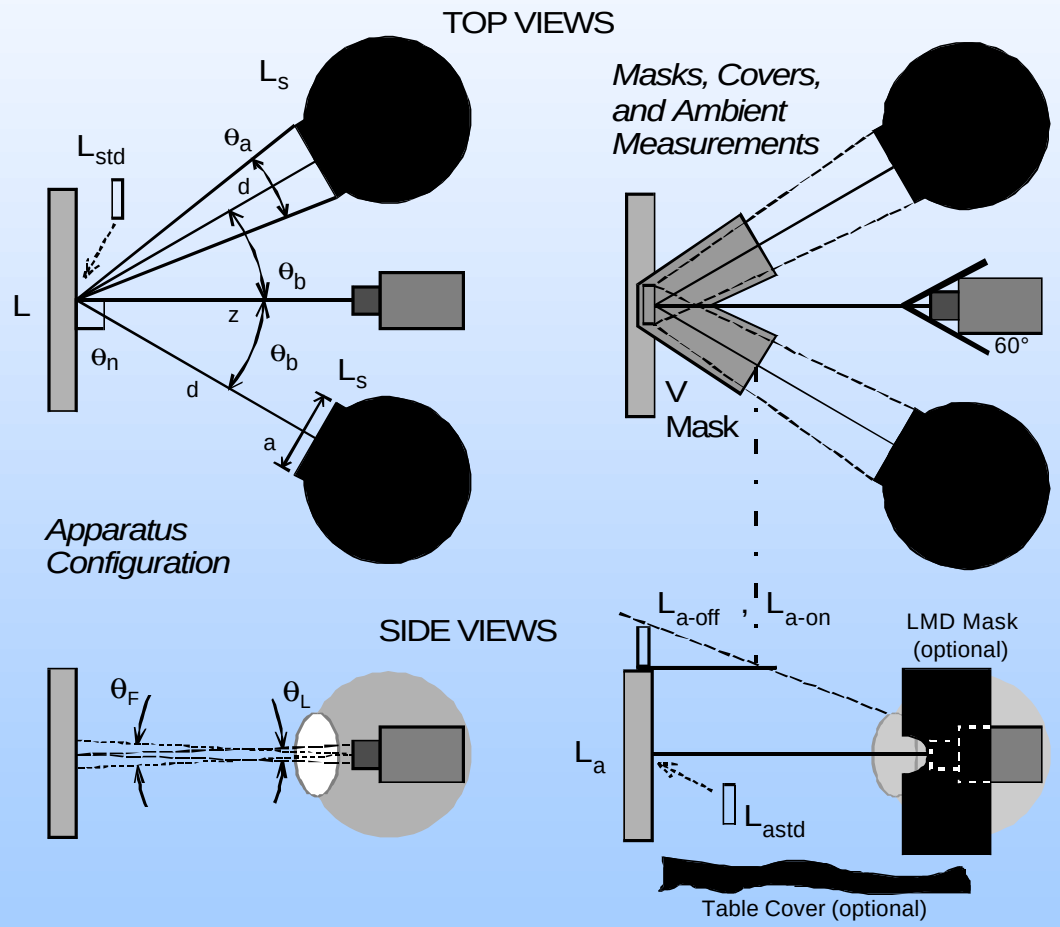

Specular Measurement

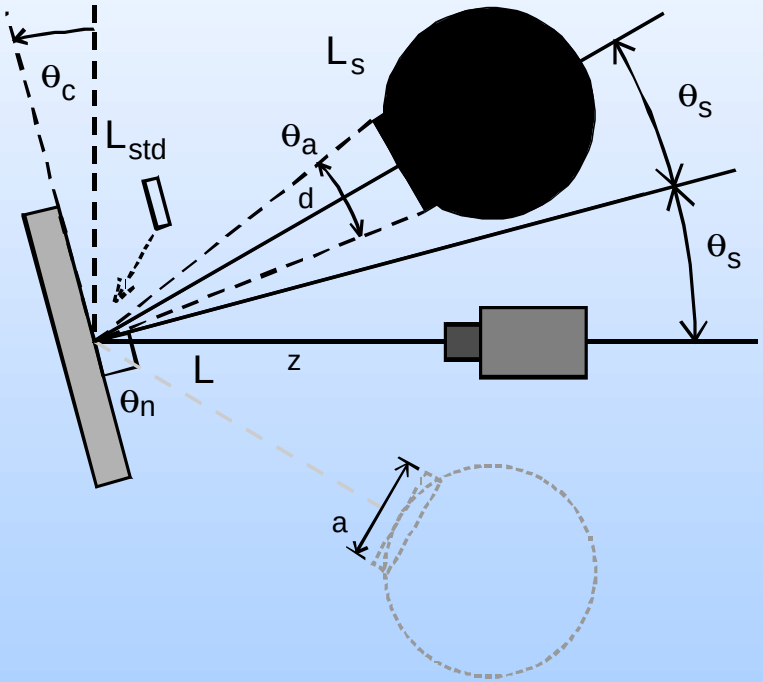

POLYSTYRENE BOX UNIFORM LIGHT SOURCE

318x318x305 mm interior (12.5" x 12.5" x12" high)
394x394x382 mm exterior (15.5"x15.5"x15" high)
150 mm exit port

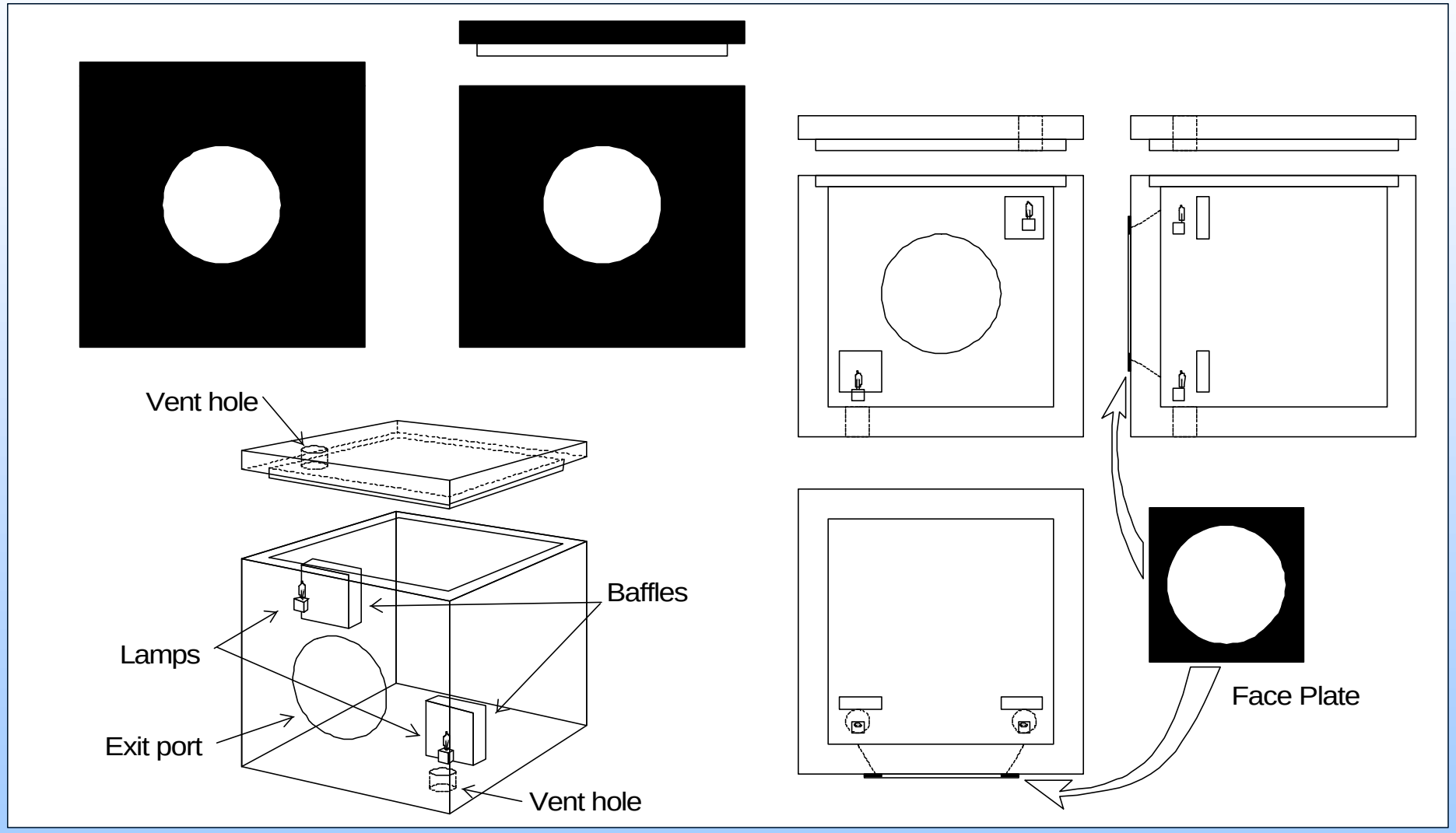

< $50
+ $600 for inexpensive power supply

POLYSTYRENE BOX UNIFORM LIGHT SOURCE

PROS

- Light weight
- Inexpensive, easy to replace
- Components available from hardware store & packing company (except power supply)
- Rugged (can drop kick across lab)
- Interior easily repaired using curved knife blade

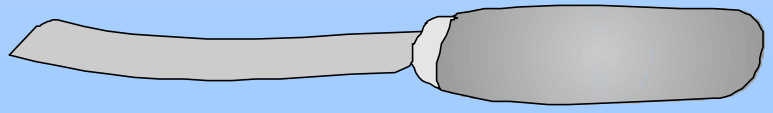

CONS

- Reproducibility is not good due to geometry changes
- Easy to poke holes in outside surface
- Longevity uncertain
- Not good for wide angle use as a Lambertian source
- People will think you're a rustic

POLYSTYRENE BOX UNIFORM LIGHT SOURCE

UNIFORMITY MEASUREMENT

Luminance Meter

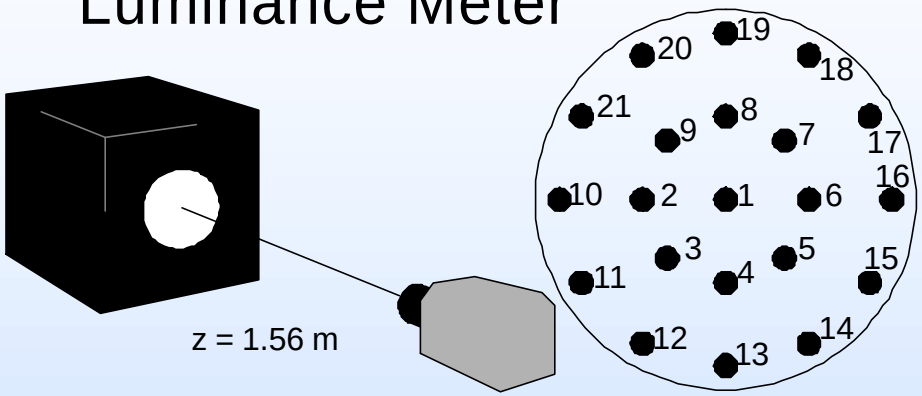

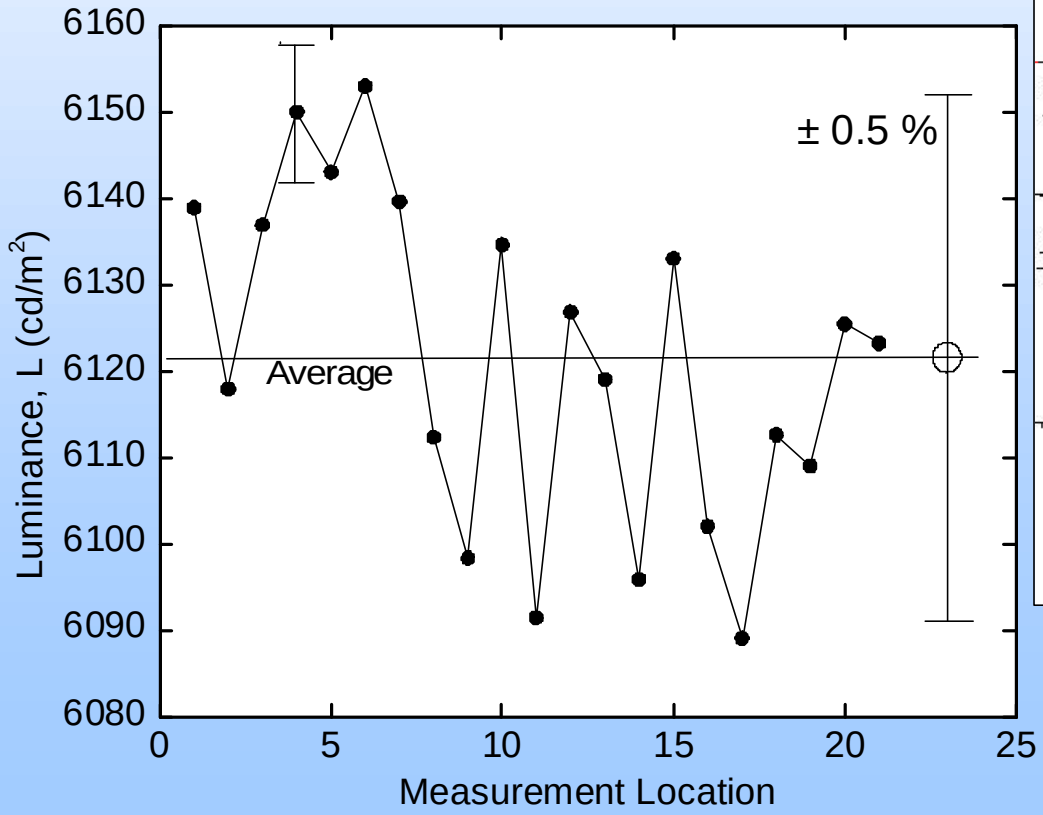

CCD Camera

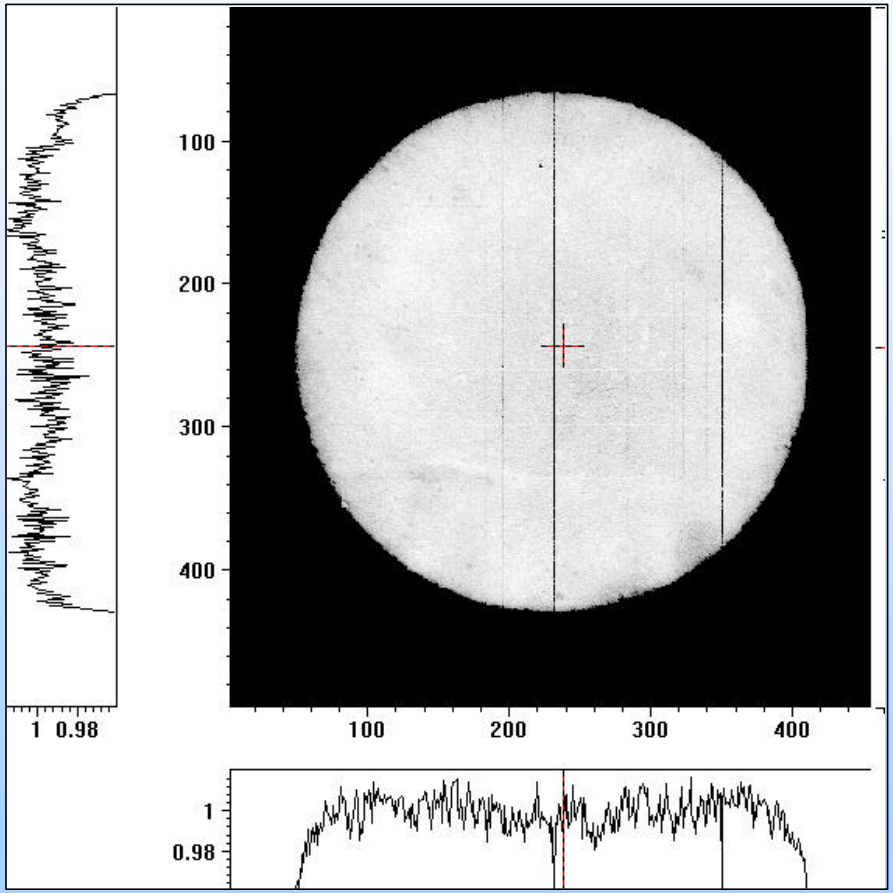

Flat field correction may not be perfect

POLYSTYRENE BOX UNIFORM LIGHT SOURCE

VIEWING ANGLE LUMINANCE AT CENTER

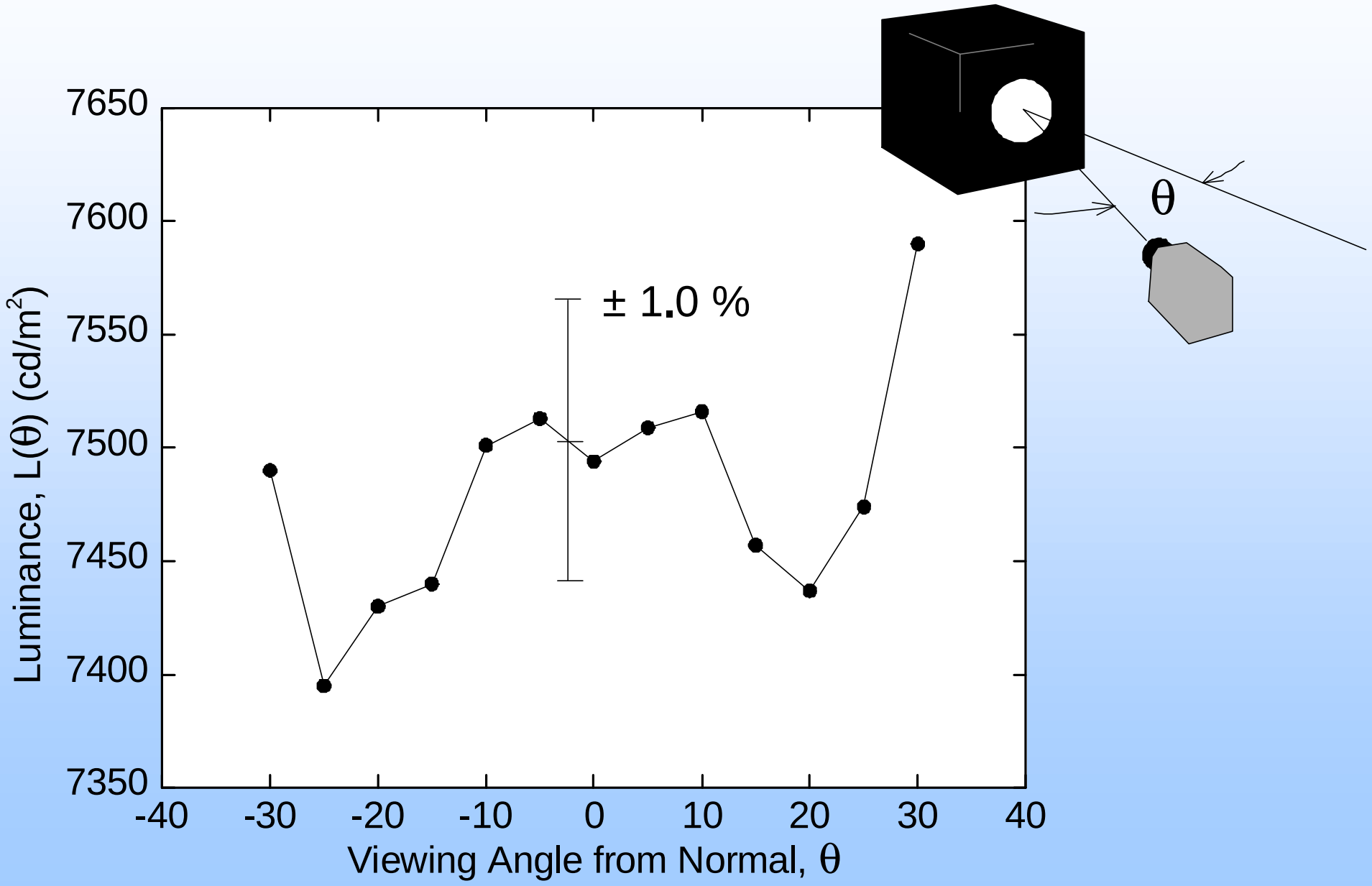

POLYSTYRENE BOX UNIFORM LIGHT SOURCE

ILLUMINANCE FROM EXIT PORT VS. ANGLE

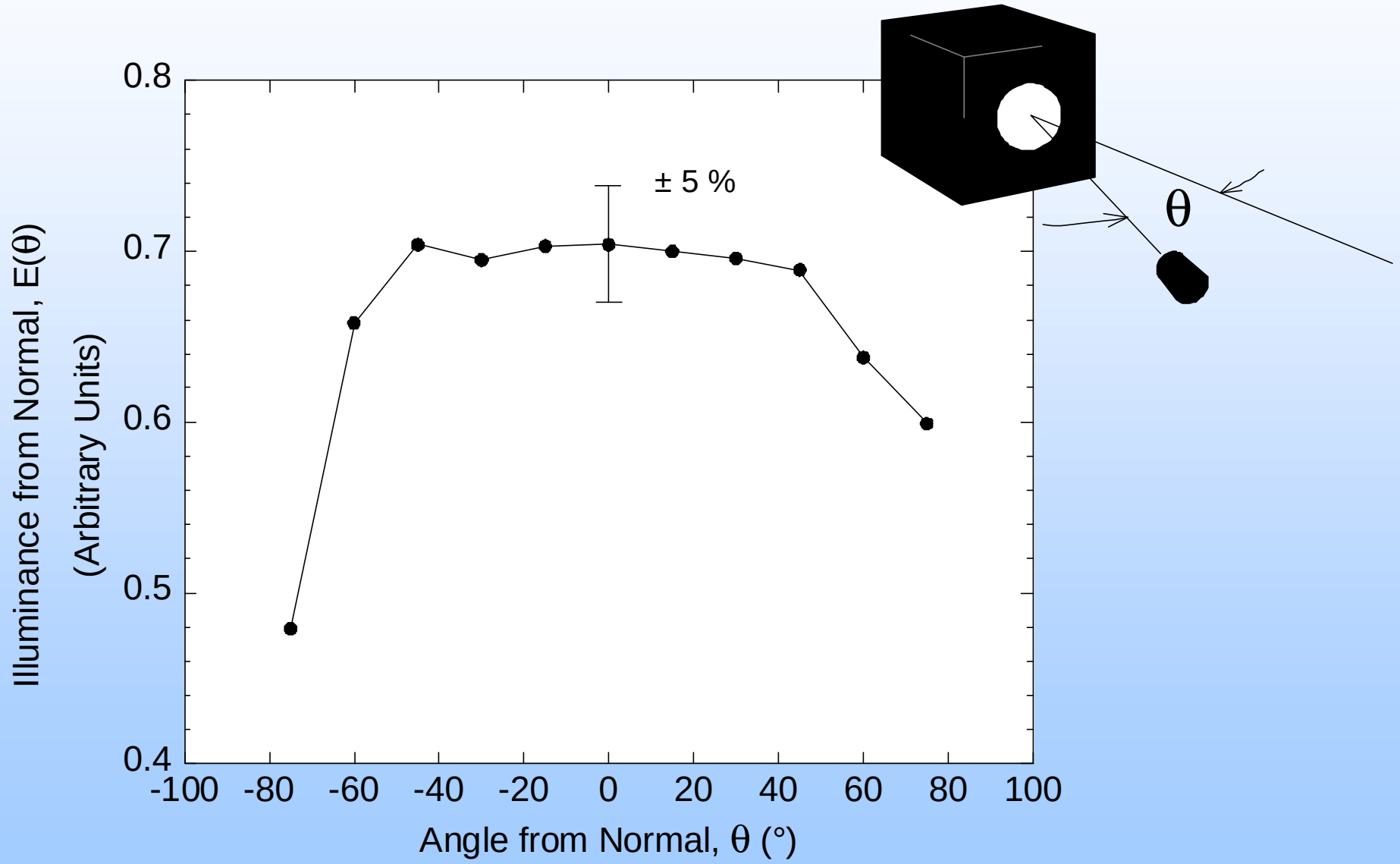

POLYSTYRENE BOX UNIFORM LIGHT SOURCE
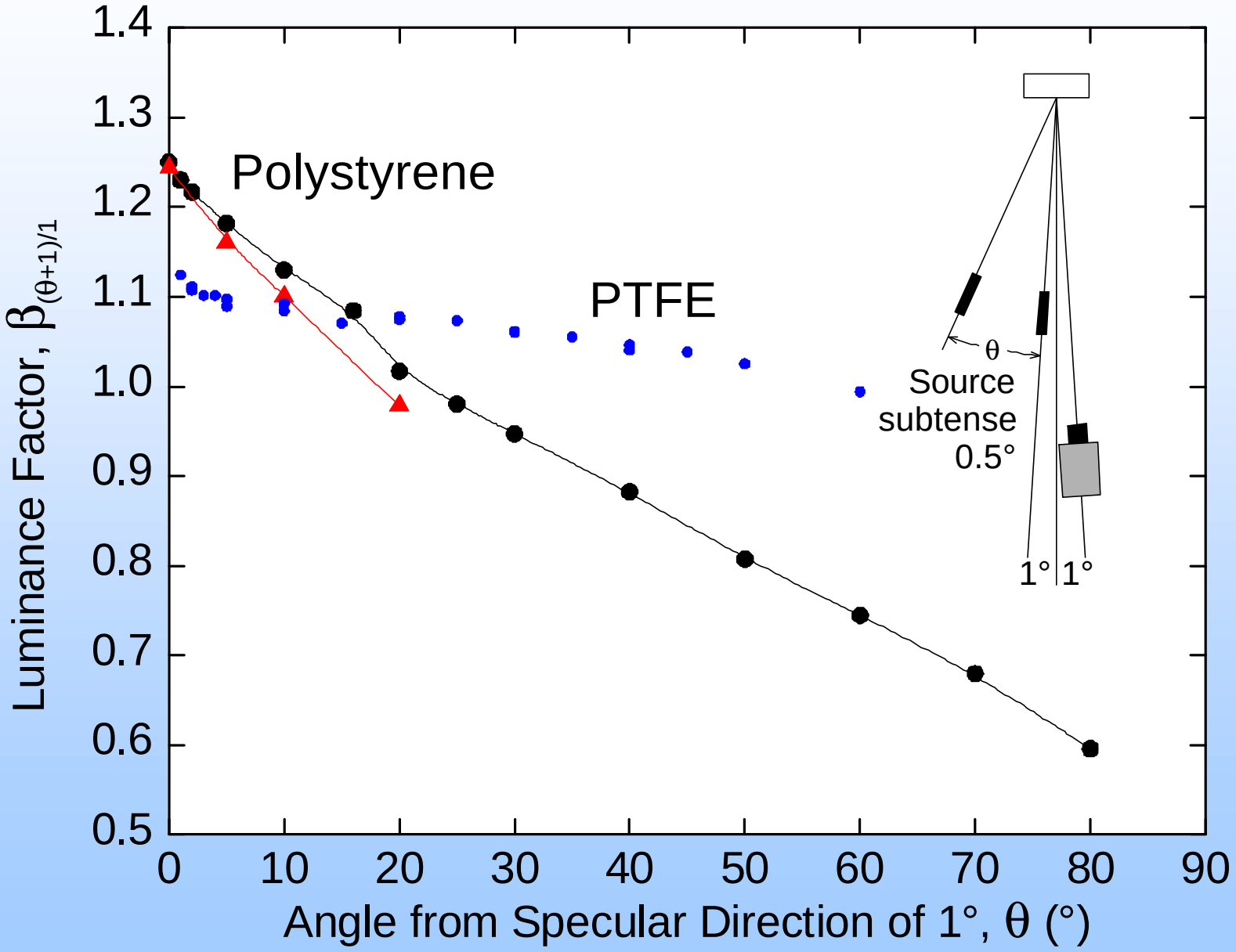
POLYSTYRENE REFLECTANCE PROPERTIES